OSCAR
Rotary limit switch

Rotary limit switch used to control and measure the movement of industrial machines or the position of the nacelle or pitch angle of wind turbines.
Oscar offers the flexibility of two different outputs with different revolution ratios and the possibility of installing different movement detection devices.

FEATURES

- It consists of a gear motor that transfers movement to the cams and the other movement detection devices through a primary input reduction stage (worm gear and helical toothed gear) and one or more secondary output stages.
- Accurate adjustment of cams by means of screws.
- Positive opening NC contacts for safety functions.
- Mechanical life of switches: up to 10 million operations.
- IP protection degree: Oscar is classified IP66, IP67 and IP69K.
- NEMA protection degree: Oscar is classified Type 4X*.
- Extreme temperature resistance: -53°C to +80°C.
- It features transmission and gear driving shafts made of stainless steel AISI 430F or AISI 303, worm gear transmission shaft rotating on ball bearings, self-lubricating technopolymer gears and driving bushes, technopolymer base and cover.
- All materials and components used are wear resistant and guarantee protection of the unit against water and dust.

OPTIONS

- Revolution ratios from 1:1 to 1:1550, achieved by combining different secondary output stages.
- Each of the two outputs can be set to a different revolution ratio to enable diversified control of the machine when special requirements need to be met.
- Snap action switches with 1NO+1NC contacts or slow action switches with 1 NC contact.
- It can be equipped with 2 cam sets (with up to 10 switches), potentiometers and encoders (alone or on top of cam sets with up to 3 switches) and Yankee absolute encoders (on top of cam sets with up to 4 switches).
- XL version featuring cover rise available with 2 cam sets (with up to 12 switches), potentiometers and encoders (alone or on top of cam sets with up to 5 switches) and Yankee absolute encoders (on top of cam sets with up to 6 switches).
- Dedicated cable clamps or connectors.
- Available with anti-moisture plug fitted to the base by means of a lock nut, to improve transpiration for the limit switch while maintaining protection against water.
- Available with flanges, pinion gears and couplings.
- Plates with universal adapter to replace existing systems.

INCREASED SAFETY SYSTEM “LIMA”

- Lima is designed to be integrated in equipment complying with the standard ISO 13849 on control system safety rules.
- Lima can be connected to a control unit or to a PLC to control the rotation of the limit switch shaft (thus of the equipments connected to it).
- Lima has two separate detection systems, without direct contact, using different technologies to ensure control redundancy.
- Lima allows the two detection systems to be wired by using two separate cables, through a 8-pin terminal board.

CERTIFICATIONS

- CE marking, cULus* marking and EAC* certification.
- Oscar is available, upon request, with the SIL1 certification (Safety Integrity Level 1), according to Standard IEC 61508.
- Complying with accident prevention regulation BGV C 1 (only for Germany).
- HALT TEST (Highly Accelerated Life Test) passed, simulating conditions largely exceeding standard operating conditions.

Use the online configurator (https://configuratore.terworld.com) or fill in the “request form” for accurate product configuration.

* Not available on all versions.

The data and the products illustrated in this brochure may be modified without notice. Under no circumstances can their description have a contractual value.

POSSIBLE ASSEMBLIES

With cover rise

With anti-moisture plug

CERTIFICATIONS

Conformity to Community Directives	2014/35/UE Low Voltage Directive
	2006/42/CE Machinery Directive
Conformity to CE Standards	EN 60204-1 Safety of machinery - Electrical equipment of machines
	EN 60204-32 Safety of machinery - Electrical equipment of machines - Requirements for hoisting machines
	EN 60947-1 Low-voltage switchgear and controlgear
	EN 60947-5-1 Low-voltage switchgear and controlgear - Control circuit devices and switching elements - Electromechanical control circuit devices
	EN 60529 Degrees of protection provided by enclosures
Conformity to cULus Standards	CSA-C22.2 No 14-13 Industrial Control Equipment
	UL 508 Industrial Control Equipment
SIL1	IEC 61508:2010 Part 2-4-6-7 Functional safety of electrical/electronic/programmable electronic safety-related systems
BGV C 1	Regulations for the prevention of accidents BGV C 1 (only for Germany)
HALT TEST	Highly Accelerated Life Test, simulation of conditions largely exceeding the standard operating conditions (data available on request)
Markings and homologations	CE cULus* EAC*

GENERAL TECHNICAL SPECIFICATIONS

Ambient temperature	Storage -53°C/+80°C
	Operational -53°C/+80°C
IP protection degree	IP 66/IP 67/IP 69K
	IP 66/IP 67 (version with cover rise)
NEMA protection degree	Type 4X*
Insulation category	Class II
Maximum rotation speed	800 rpm (Output 1 >1:22, Output 2 >1:22 or =1:1)
	200 rpm (Output 1 ≤1:22, Output 2 ≤1:22 or =1:1)
Cable entry	Cable clamp M20 - M16 (8 max)
Shafts	Stainless steel AISI 430F (version not cULus)
	Stainless steel AISI 303

* Not available on all versions.

TECHNICAL SPECIFICATIONS OF THE SWITCHES

Code	PRSL0110XX	PRSL0111XX
Utilisation category	AC 15	
Rated operational voltage	250 Vac	
Rated operational current	3 A	
Rated thermal current	10 A	
Rated insulation voltage	300 Vac	
Mechanical life	$10x10^6$ operations	
Connections	Screw-type terminals	
Wires	1x2.5 mm^2, 2x1.5 mm^2 (UL (c)UL: use 60°C or 75°C copper (CU) conductors and stiff or flexible wire 14-22 AWG)	
Tightening torque	0.5 Nm	
Microswitch type	Double break, snap action	Double break, slow action
Contacts	1NO+1NC (All NC contacts are of the positive opening operation type ⊖)	1NC (All NC contacts are of the positive opening operation type ⊖)
Scheme	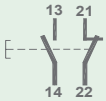	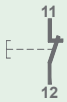
Markings and homologations	CE cULus EAC	

Switches PRSL0100XX available on request.

TECHNICAL SPECIFICATIONS OF THE POTENTIOMETERS

Code of potentiometer with support	PA020001	PA020002
Ohmic value	10 kΩ	10 kΩ mechanical stop
Resolution	Infinite	
Independant linearity	±1%	
Life time	$10x10^6$ movements	
Operational ambient temperature	-55°C/+105°C	
Continuos rotation (without stop)	360°	
Continuos rotation (with stop)	333° ±5°	
Actual electrical angle	310° ±5°	
Ohmic value tolerance	±20%	

Code of potentiometer with support	PA020003	PA020004	PA020005
Ohmic value	10 kΩ	10 kΩ	5 kΩ
Connections	4 turrets	3 turrets	4 turrets
Indipendent linearity (over AEA -3°)	≤ ±1%	≤ ±0.35%	≤ ±1%
Life time	$5x10^6$ movements		
Operational ambient temperature	-55°C/+125°C		
Mechanical angle	360° continuous		
Actual Electrical Angle (AEA)	340°±5°		
Ohmic value tolerance	Max ± 20% at 20°C	Max ±10% at 20°C	Max ±20% at 20°C

Code of potentiometer with support	PA020006	PA020007	PA020008
Ohmic value	4,7 kΩ	10 kΩ	2.2 kΩ
Independant linearity (ref. AEA -3°)		±0.25%	
Life time		$3x10^6$ movements	
Operational ambient temperature		-55°C/+125°C	
Mechanical angle		360° continuous	
Actual Electrical Angle (AEA)		355°±5°	
Ohmic value tolerance		±5%	
Temperature drift		< 50 PPM/°C	

Code of potentiometer with support	PA020009
Ohmic value	2 kΩ
Resolution	Better then 0.008°
Linearity	±0.075%
Independant linearity	±0.075%
Life time	$100x10^6$ movements
Operational ambient temperature	-40°C/+100°C
Mechanical angle	360° continuous
Actual electrical travel	350° ±2°
Ohmic value tolerance	±20%

TECHNICAL SPECIFICATIONS OF THE ENCODERS

Code with support	PA030001	PA030002
Resolution	36 pulses/rev.	150 pulses/rev.
Operational ambient temperature	-40°C/+85°C	
Code	Incremental	
Supply voltage	4.5 Vdc min. to 30 Vdc max. (35 mA max. - no load)	
Output voltage	Low: 500 mV max. at 10 mA High: (Vin – 0.6) at -10 mA (Vin – 1.3) at -25 mA	
Output current	25 mA max. load per output channel	
Output format	Two channel (A, B) quadrature with Index (Z)	
Phase sense	A leads B clockwise (CW) from the mounting end of the encoder	
Accuracy	+/- 0.8 arc-min.	
Outputs	Push pull	
Electrical protection	Protection against reverse polarity and output short-circuit	

CERTIFICATIONS OF THE ABSOLUTE ENCODER YANKEE

Conformity to Community Directives	2014/30/UE Electromagnetic Compatibility (EMC) Directive
	2006/42/CE Machinery Directive
	2014/35/UE Low Voltage Directive (LVD)
Conformity to CE Standards	EN 61326-1 Electrical equipment for measurement, control and laboratory use - EMC requirements
	EN 60529 Degrees of protection provided by enclosures
Conformity to cULus Standards	CSA-C22.2 No 14-13 Industrial Control Equipment
	UL 508 Industrial Control Equipment
Markings and homologations	CE cULus

GENERAL TECHNICAL SPECIFICATIONS OF THE ABSOLUTE ENCODER YANKEE

Ambient temperature	Storage -40°C/+80°C
	Operational -40°C/+80°C
IP protection degree	IP 20
Free rotation	360°
Maximum rotation speed	800 rpm

ELECTRICAL SPECIFICATIONS OF THE ABSOLUTE ENCODER YANKEE

Code	PA01AA01	PA01AB01	PA01AC01
Analog output	Current 4 ÷ 20 mA	Voltage 0 ÷ 10 V	PWM 0 ÷ 100 %
Power supply	12 ÷ 48 Vdc/12 ÷ 48 Vac		
Protection against reverse polarity	Yes		
Absorption	50 mA		
Resolution	12 bit		
Linearity	+/-0.5°		
Max. hysteresis	0.1°		
Zero Point setting	Through button/wire		
Signal increment direction	CW (standard)/CCW (on request)		
Connections	Terminal board		
Terminal wires	0.14 mm² - 1.5 mm²		
Terminal tightening torque	0.22 Nm - 0.25 Nm		

CERTIFICATIONS OF OSCAR WITH INCREASED SAFETY SYSTEM “LIMA”

Conformity to Community Directives	2014/35/UE Low Voltage Directive
	2006/42/CE Machinery Directive
Conformity to CE Standards	EN 60204-1 Safety of machinery - Electrical equipment of machines
	EN 60204-32 Safety of machinery - Electrical equipment of machines - Requirements for hoisting machines
	EN 60947-1 Low-voltage switchgear and controlgear
	EN 60947-5-1 Low-voltage switchgear and controlgear - Control circuit devices and switching elements - Electromechanical control circuit devices
	EN 60529 Degrees of protection provided by enclosures
SIL1	IEC 61508:2010 Part 2-4-6-7 Functional safety of electrical/electronic/programmable electronic safety-related systems
Markings and homologations	CE cULus (pending)

GENERAL TECHNICAL SPECIFICATIONS OF OSCAR WITH LIMA

Ambient temperature	Storage -25°C/+75°C
	Operational -25°C/+75°C
IP protection degree	IP 66/IP 67/IP 69K
	IP 66/IP 67 (version with cover rise)
NEMA protection degree	Type 4X
Insulation category	Class II
Maximum rotation speed	800 rpm (Output 1 >1:22, Output 2 >1:22 or =1:1)
	200 rpm (Output 1 ≤1:22, Output 2 ≤1:22 or =1:1)
Cable entry	Cable clamp M20 - M16 (8 max)
Sensor connection	Self-lifting screw terminal board - 8 PIN (4 for each sensor)

OUTPUT TECHNICAL SPECIFICATIONS OF OSCAR WITH LIMA

Resolution Signal	5 pulses/rev.
Supply amplitude Range	10-30 Vdc
Switching Frequency max.	66.6 Hz
Current Consumption max (no load)	12 mA (for each sensor)
Voltage Drop Vd	< 2 Vdc
Output Current	< 100 mA (for each sensor)
Short Circuit Protection	Yes
Reverse Polarity Protection	Yes
MTTF(d) PNP sensor	533 years
MTTF(d) NPN sensor	626 years

OUTPUT SIGNAL OF OSCAR WITH LIMA

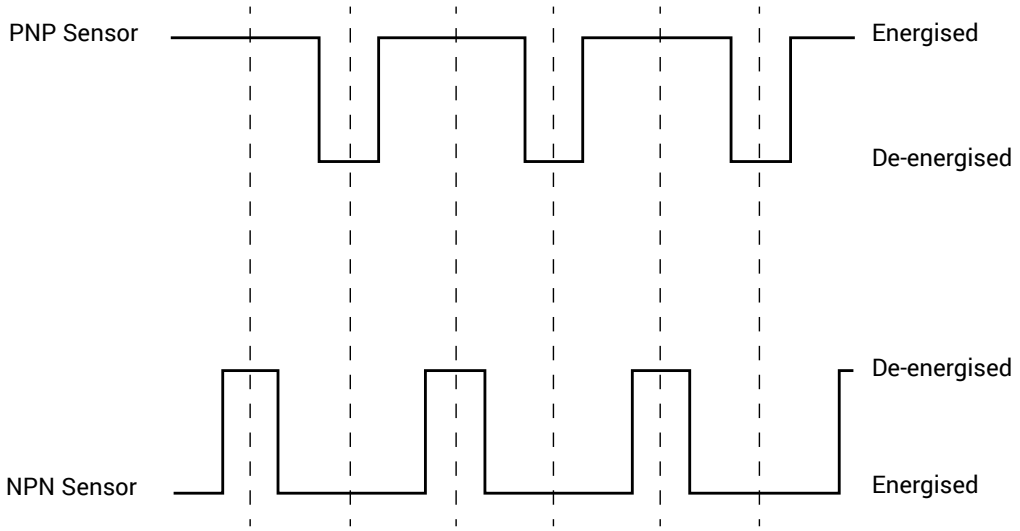

CONNECTION DIAGRAM OF LIMA

Sensor	Terminal	Function	Value
PNP	1	V+ sensor	10-30 Vdc
	2	Output sensor	PNP
	3	GND sensor	-
	4	SHD sensor	-
NPN	5	SHD sensor	-
	6	V+ sensor	10-30 Vdc
	7	Output sensor	NPN
	8	GND sensor	-

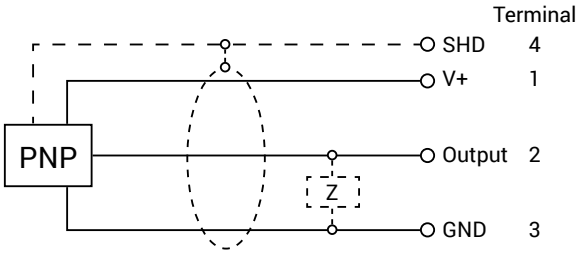

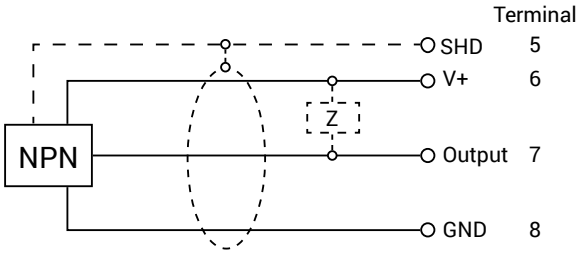

EXAMPLE OF USE OF OSCAR LIMIT SWITCH WITH INCREASED SAFETY SYSTEM “LIMA”

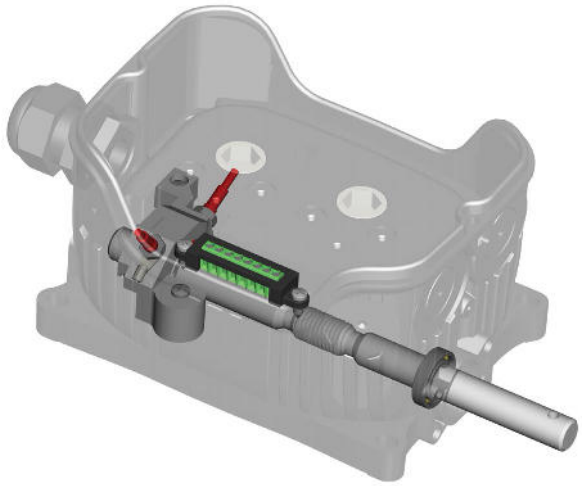

Oscar limit switch equipped with Lima can be used, just like standard limit switches, for material handling in construction plants (e.g. to control up/down lifting of winches), with the additional possibility to control the limit switch shaft rotation when using Lima connected to a special control unit designed to manage the following functions:

- **Load drop**
  Type of function: inhibition.
  Trigger event: the control system verifies that the limit switch shaft speed does not exceed the selected set point speed.
  Reaction: brake prompt closure, preventing load to drop free.
  Safety function: Lima generates a signal depending on the limit switch shaft speed; the control unit compares the measured speed with the selected set point value.
  If the measured speed exceeds the set-point value by a selected threshold, the control unit stops the motor and activates the brake.

- **Standstill shaft**
  Type of function: inhibition.
  Trigger event: the limit switch shaft speed is greater than 0, but no valid speed command has been entered.
  Reaction: brake prompt closure.
  Safety function: the control system verifies that the limit switches shaft speed is equal to 0 when a valid speed set-point is not entered.

- **Shaft in motion**
  Type of function: inhibition.
  Trigger event: the measured limit switch shaft speed is 0, but a valid speed command has been entered.
  Reaction: brake prompt closure.
  Safety function: the control system verifies that the limit switches shaft speed is greater than 0 when a valid speed set-point is entered.
  This function is used to check that the limit switch shaft is coupled to the gear unit, therefore detecting any shaft or limit switch connection system break.

NOTE: The function of Lima is that of providing a signal depending on the limit switch shaft speed. The above example is intended to describe a possible application of the limit switch Oscar equipped with Lima.

OVERALL DIMENSIONS (mm)

Standard

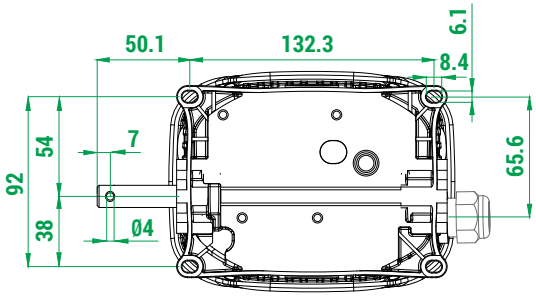

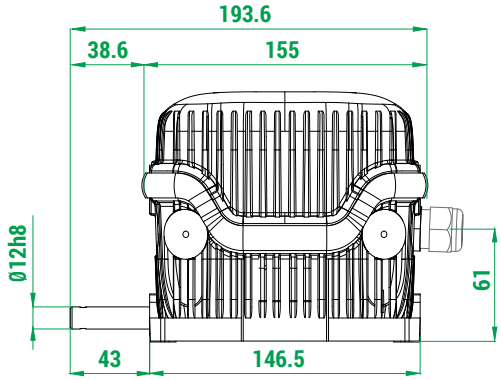

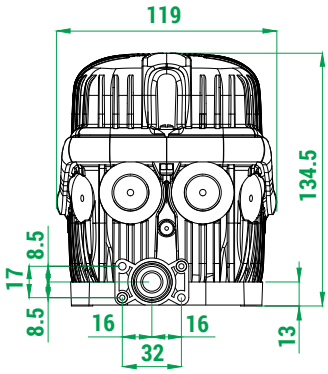

With flange

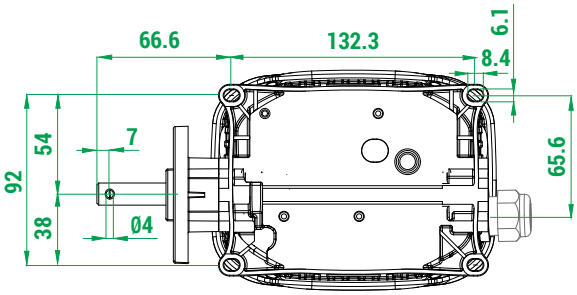

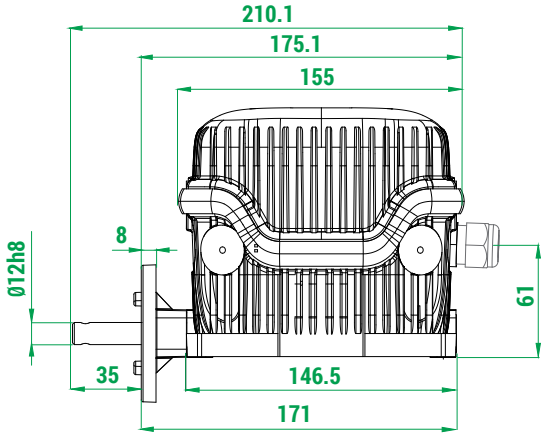

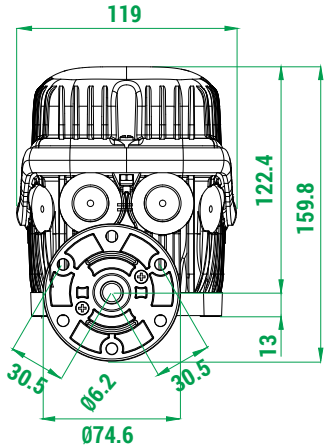

Oscar XL with cover rise

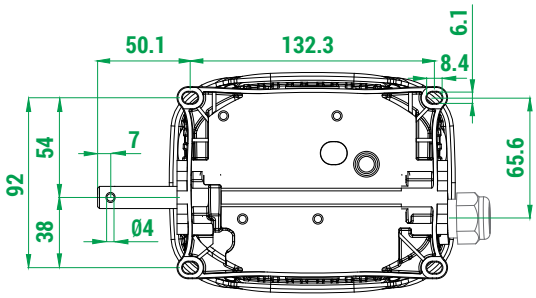

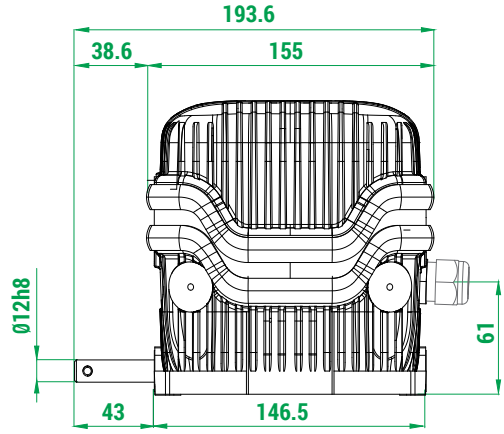

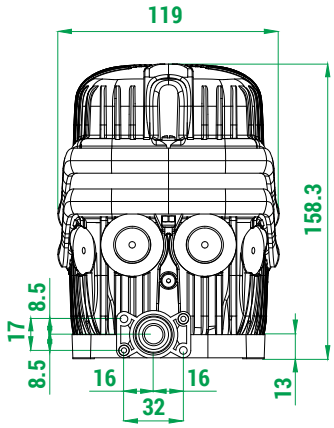

Oscar XL with cover rise and flange

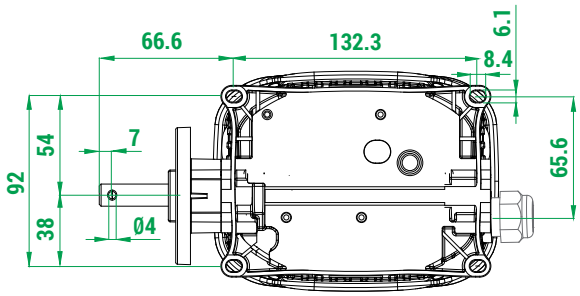

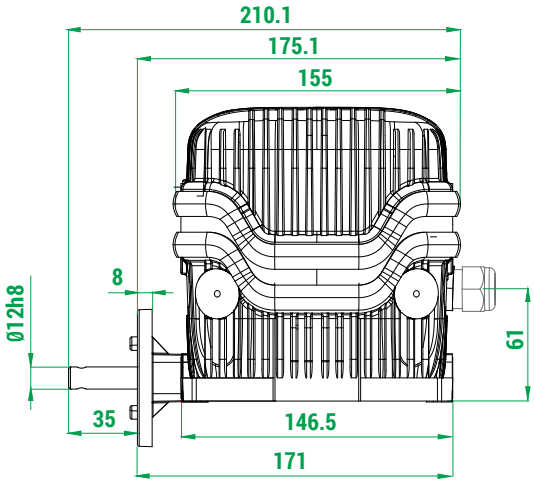

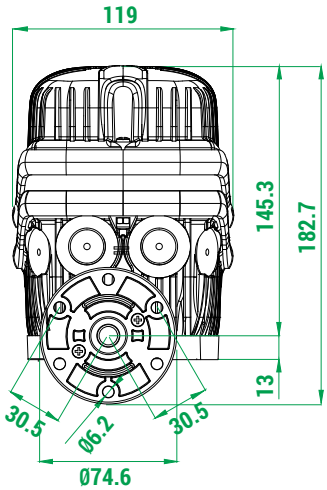

STANDARD LIMIT SWITCHES

Standard limit switches are equipped with cams PRSL7194PI and shafts made of stainless steel AISI 430F.
Standard limit switches are not cULus certified.

Output 1 rated revolution ratio	Real revolution ratio	Output 2 rated revolution ratio	No. of cams and switches	Switches	
				PRSL0110XX 1NO+1NC	PRSL0111XX 1NC
				Code	Code
1:1	1:1	1:1	2	PFC9067L0001007	PFC9067L0001013
		1:1	4	PFC9067L0001008	PFC9067L0001012
		1:1	4+2	PFC9067L0001010	PFC9067L0001014
		1:1	4+4	PFC9067L0001011	PFC9067L0001015
1:5	1:5.83	1:5	2	PFC9067L0005007	PFC9067L0005008
		1:1	2	PFC9067L0005009	PFC9067L0005010
		1:5	4	PFC9067L0005011	PFC9067L0005012
		1:1	4	PFC9067L0005013	PFC9067L0005014
		1:5	4+2	PFC9067L0005015	PFC9067L0005016
		1:5	4+4	PFC9067L0005017	PFC9067L0005018
1:10	1:11.66	1:10	2	PFC9067L0011002	PFC9067L0011003
		1:1	2	PFC9067L0011004	PFC9067L0011005
		1:10	4	PFC9067L0011006	PFC9067L0011007
		1:1	4	PFC9067L0011008	PFC9067L0011009
		1:10	4+2	PFC9067L0011010	PFC9067L0011011
		1:10	4+4	PFC9067L0011012	PFC9067L0011013
1:15	1:17	1:15	2	PFC9067L0017005	PFC9067L0017006
		1:1	2	PFC9067L0017007	PFC9067L0017008
		1:15	4	PFC9067L0017009	PFC9067L0017010
		1:1	4	PFC9067L0017011	PFC9067L0017012
		1:15	4+2	PFC9067L0017013	PFC9067L0017014
		1:15	4+4	PFC9067L0017015	PFC9067L0017016
1:20	1:22.15	1:20	2	PFC9067L0022018	PFC9067L0022019
		1:1	2	PFC9067L0022020	PFC9067L0022022
		1:20	4	PFC9067L0022023	PFC9067L0022024
		1:1	4	PFC9067L0022026	PFC9067L0022021
		1:20	4+2	PFC9067L0022027	PFC9067L0022028
		1:20	4+4	PFC9067L0022029	PFC9067L0022030
1:25	1:31.00	1:25	2	PFC9067L0031032	PFC9067L0031033
		1:1	2	PFC9067L0031034	PFC9067L0031035
		1:25	4	PFC9067L0031031	PFC9067L0031036
		1:1	4	PFC9067L0031037	PFC9067L0031038
		1:25	4+2	PFC9067L0031039	PFC9067L0031040
		1:25	4+4	PFC9067L0031041	PFC9067L0031042
1:50	1:62	1:50	2	PFC9067L0062004	PFC9067L0062014
		1:1	2	PFC9067L0062012	PFC9067L0062015
		1:50	4	PFC9067L0062005	PFC9067L0062016
		1:1	4	PFC9067L0062013	PFC9067L0062017
		1:50	4+2	PFC9067L0062006	PFC9067L0062021
		1:50	4+4	PFC9067L0062007	PFC9067L0062022

Output 1 rated revolution ratio	Real revolution ratio	Output 2 rated revolution ratio	No. of cams and switches	Switches	
				PRSL0110XX 1NO+1NC 	PRSL0111XX 1NC
				Code	Code
1:70	1:73.63	1:70	2	PFC9067L0073004	PFC9067L0073009
		1:1	2	PFC9067L0073005	PFC9067L0073010
		1:70	4	PFC9067L0073003	PFC9067L0073011
		1:1	4	PFC9067L0073006	PFC9067L0073012
		1:70	4+2	PFC9067L0073007	PFC9067L0073013
		1:70	4+4	PFC9067L0073008	PFC9067L0073014
1:100	1:107	1:100	2	PFC9067L0107014	PFC9067L0107025
		1:1	2	PFC9067L0107019	PFC9067L0107026
		1:100	4	PFC9067L0107015	PFC9067L0107004
		1:1	4	PFC9067L0107020	PFC9067L0107018
		1:100	4+2	PFC9067L0107016	PFC9067L0107027
		1:100	4+4	PFC9067L0107017	PFC9067L0107028
1:150	1:156.50	1:150	2	PFC9067L0156004	PFC9067L0156011
		1:1	2	PFC9067L0156007	PFC9067L0156012
		1:150	4	PFC9067L0156005	PFC9067L0156013
		1:1	4	PFC9067L0156008	PFC9067L0156014
		1:150	4+2	PFC9067L0156006	PFC9067L0156015
		1:150	4+4	PFC9067L0156009	PFC9067L0156016
1:200	1:214.20	1:200	2	PFC9067L0214004	PFC9067L0214010
		1:1	2	PFC9067L0214006	PFC9067L0214011
		1:200	4	PFC9067L0214005	PFC9067L0214002
		1:1	4	PFC9067L0214007	PFC9067L0214012
		1:200	4+2	PFC9067L0214008	PFC9067L0214013
		1:200	4+4	PFC9067L0214009	PFC9067L0214014
1:250	1:254.30	1:250	2	PFC9067L0254004	PFC9067L0254014
		1:1	2	PFC9067L0254007	PFC9067L0254015
		1:250	4	PFC9067L0254005	PFC9067L0254016
		1:1	4	PFC9067L0254008	PFC9067L0254017
		1:250	4+2	PFC9067L0254009	PFC9067L0254018
		1:250	4+4	PFC9067L0254010	PFC9067L0254019
1:300	1:313	1:300	2	PFC9067L0313023	PFC9067L0313030
		1:1	2	PFC9067L0313025	PFC9067L0313031
		1:300	4	PFC9067L0313024	PFC9067L0313032
		1:1	4	PFC9067L0313026	PFC9067L0313033
		1:300	4+2	PFC9067L0313027	PFC9067L0313034
		1:300	4+4	PFC9067L0313028	PFC9067L0313035
1:450	1:471.20	1:450	2	PFC9067L0471002	PFC9067L0471008
		1:1	2	PFC9067L0471003	PFC9067L0471009
		1:450	4	PFC9067L0471004	PFC9067L0471001
		1:1	4	PFC9067L0471005	PFC9067L0471010
		1:450	4+2	PFC9067L0471006	PFC9067L0471011
		1:450	4+4	PFC9067L0471007	PFC9067L0471012

ASSEMBLY DRAWING

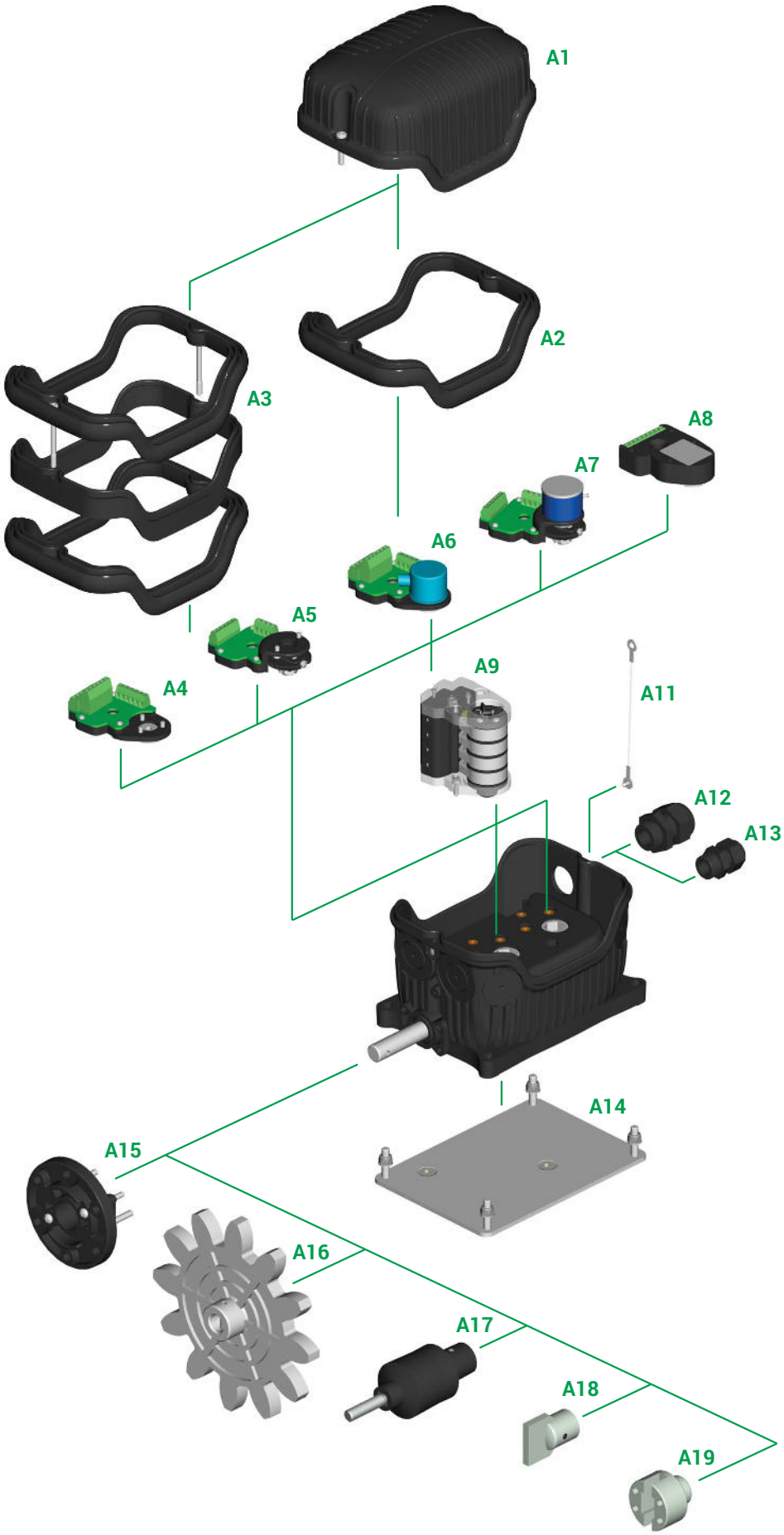

Refer to the following tables for descriptions of components: “Standard cam sets”, “Potentiometers, encoders and sensors” and “Accessories”.

COMPONENTS

Standard cam sets

Ref.	Drawing	No. and type of cams	No. and type of switches	Code
		2 cams A	2 PRSL0110XX switches	FCL20001
		2 cams A	2 PRSL0111XX switches	FCL20002
		Cams A+C	2 PRSL0110XX switches	FCL20003
		Cams A+C	2 PRSL0111XX switches	FCL20004
		2 cams C	2 PRSL0110XX switches	FCL20005
		2 cams C	2 PRSL0111XX switches	FCL20006
		Cams D+D+B+F	4 PRSL0110XX switches	FCL40001
		Cams D+D+B+F	4 PRSL0111XX switches	FCL40002
		4 cams A	4 PRSL0110XX switches	FCL40003
		4 cams A	4 PRSL0111XX switches	FCL40004
		Cams A+A+C+C	4 PRSL0110XX switches	FCL40005
		Cams A+A+C+C	4 PRSL0111XX switches	FCL40006
		4 cams C	4 PRSL0110XX switches	FCL40007
A9		4 cams C	4 PRSL0111XX switches	FCL40008
		Cams C+C+C+E	4 PRSL0110XX switches	FCL40009
		Cams C+C+C+E	4 PRSL0111XX switches	FCL40010
		Cams A+A+E+E	4 PRSL0110XX switches	FCL40011
		Cams A+A+E+E	4 PRSL0111XX switches	FCL40012
		5 cams A	5 PRSL0110XX switches	FCL50006
		5 cams A	5 PRSL0111XX switches	FCL50005
		5 cams C	5 PRSL0110XX switches	FCL50001
		5 cams C	5 PRSL0111XX switches	FCL50010
		6 cams A	6 PRSL0110XX switches	FCL60003
		6 cams A	6 PRSL0111XX switches	FCL60006
		6 cams C	6 PRSL0110XX switches	FCL60001
		6 cams C	6 PRSL0111XX switches	FCL60010

Other sets with 2/3/4/5 or 6 cams/switches are available on request.

Cam reference chart

Cam			Code for PRSL0110XX switches	Switching angle with PRSL0110XX	Code for PRSL0111XX switches	Switching angle with PRSL0111XX
A		1 points	PRSL7194PI	21.5° ±0.5°	PRSL7194PI	23.0° ±0.5°
B		10 point	PRSL7193PI	21.5° ±0.5°	PRSL7193PI	23.0° ±0.5°
C		60° sector	PRSL7195PI	82.0° ±0.5°	PRSL7195PI	86.0° ±0.5°
D		72° sector	PRSL7196PI	94.0° ±0.5°	PRSL7196PI	97.5° ±0.5°
E		180° sector	PRSL7191PI	204.5° ±0.5°	PRSL7191PI	203.0° ±0.5°
F		305° sector	PRSL7192PI	328.5° ±0.5°	PRSL7192PI	327.0° ±0.5°

Potentiometers, encoders and sensors

Ref.	Drawing	Description	Code
A4		Support for encoder	PA030000
A5		Support for potentiometer	PA020000
A6		Encoder 36 pulses./rev. with support	PA030001
		Encoder 150 pulses./rev. with support	PA030002
A7	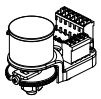	Potentiometer 10 kΩ with support	PA020001
		Potentiometer 10 kΩ mechanical stop with support	PA020002
		Potentiometer 10 kΩ ±10% 4 pins with support	PA020003
		Potentiometer 10 kΩ ±10% 3 pins with support	PA020004
		Potentiometer 5 kΩ ±10% with support	PA020005
		Potentiometer 4.7 kΩ with support	PA020006
		Potentiometer 10 kΩ with support	PA020007
		Potentiometer 2.2 kΩ with support	PA020008
		Potentiometer 2KΩ with support	PA020009
A8		Absolute encoder Yankee - current output	PA01AA01
		Absolute encoder Yankee - voltage output	PA01AB01
		Absolute encoder Yankee - PWM output	PA01AC01

Accessories

Ref.	Drawing	Description	Code
A1	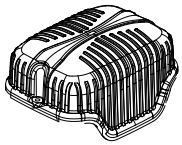	Cover with screws	PA090016
A2	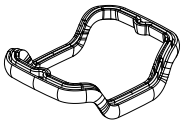	Tightening rubber	PRGU1510PE
A3	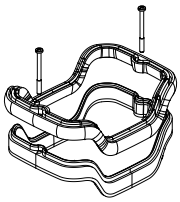	Cover rise with tightening rubber and screws	PRSL0703PI
A11		Cover holding wire + screw (bag with 10 pieces)	PRSL0358PI
A12		Cable clamp M20x1.5	PRPS0063PE
A13		Cable clamp M16	PRPS0062PE
A14	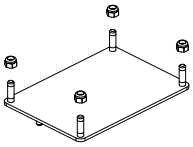	Fixing plate	PRSL0729PI
A15	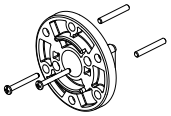	Flange with screws and pins	PRSL0356PI
A16	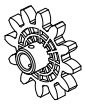	Pinion gear	See pinion gear tables
A17	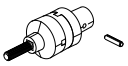	Coupling with pin	PRSL0981PI
A18		Male coupling with pin	PRSL0919PI
A19		Female coupling with pin	PRSL0920PI

Moulded pinion gears

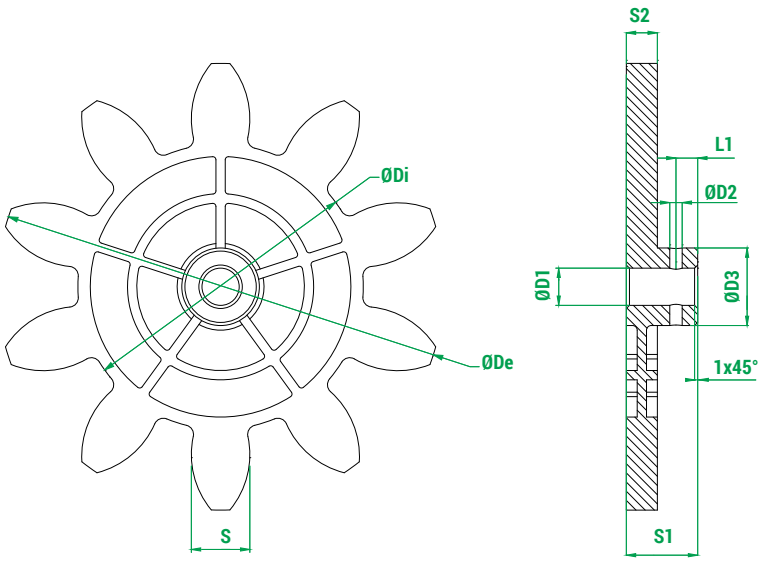

Legend	
Z	Number of teeth
M	Module
Dp	Primitive diameter
De	External diameter
Di	Internal diameter
a	Addendum
d	Dedendum
Alpha	Pressure angle

Code	Z	M	Dp	De	Di	a	d	S	Alpha	D1	D2	D3	S1	S2	L1
PRSL0915PI	8	20.00	160.00	200.00	113.20	20.00	23.40	31.41	20.00	12.00	4.00	24.00	23.00	10.00	7.00
PRSL0912PI	10	12.00	120.00	144.00	92.00	12.00	14.00	18.85	20.00	12.00	4.00	25.00	23.00	10.00	7.00
PRSL0913PI	10	14.00	140.00	168.00	107.24	14.00	16.38	21.99	20.00	12.00	4.00	24.60	23.00	10.00	7.00
PRSL0914PI	10	16.00	160.00	192.00	122.67	16.00	18.67	25.13	20.00	12.00	4.00	24.00	23.00	10.00	7.00
PRSL0917PI	11	6.00	66.00	78.00	51.96	6.00	7.02	9.42	20.00	12.00	4.00	19.00	23.00	8.00	7.00
PRSL0916PI	12	5.00	60.00	70.00	48.30	5.00	5.83	7.85	20.00	12.00	4.00	20.00	23.00	8.00	7.00
PRSL0918PI	12	8.00	96.00	112.00	77.28	8.00	9.36	12.56	20.00	12.00	3.90	21.50	23.50	10.00	7.00
PRSL0911PI	12	10.00	120.00	140.00	96.67	10.00	11.67	15.71	20.00	12.00	4.00	25.00	23.50	10.00	7.00
PRSL0944PI	12	12.00	144.00	168.00	116.00	12.00	14.00	18.85	20.00	12.00	4.00	24.00	23.00	10.00	7.00

Measuring unit: mm.

Waterjet cut pinion gears

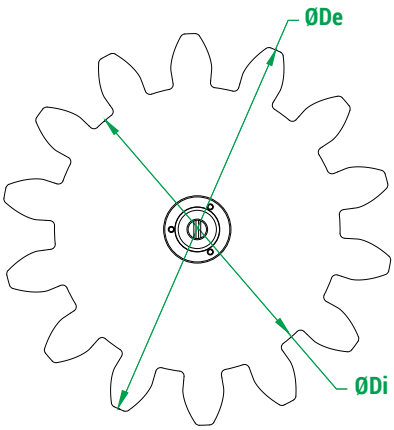

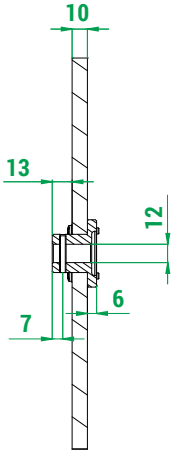

Legend	
Z	Number of teeth
M	Module
Dp	Primitive diameter
De	External diameter
Di	Internal diameter
a	Addendum
d	Dedendum
Alpha	Pressure angle

Code	Z	M	Dp	De	Di	a	d	Alpha
PRSL0857PI	8	18.00	144.00	180.00	102.00	18.00	21.00	20.00
PRSL0855PI	8	24.00	192.00	240.00	136.00	24.00	28.00	20.00
PRSL0992PI	9	10.00	90.00	110.00	66.67	10.00	11.67	20.00
PRSL0879PI	9	16.00	144.00	176.00	106.67	16.00	18.67	20.00
PRSL0854PI	9	18.00	162.00	198.00	120.00	18.00	21.00	20.00
PRSL0871PI	9	20.00	180.00	220.00	133.33	20.00	23.33	20.00
PRSL0849PI	9	24.00	216.00	264.00	160.00	24.00	28.00	20.00
PRSL0846PI	10	10.00	100.00	120.00	76.67	10.00	11.67	20.00
PRSL0993PI	10	18.00	180.00	216.00	138.00	18.00	21.00	20.00
PRSL0970PI	10	22.00	220.00	264.00	168.52	22.00	25.74	20.00
PRSL0856PI	10	24.00	240.00	288.00	184.00	24.00	28.00	20.00
PRSL0861PI	11	12.00	132.00	156.00	104.00	12.00	14.00	20.00
PRSL0998PI	11	18.00	198.00	234.00	156.00	18.00	21.00	20.00
PRSL0997PI	11	20.00	220.00	260.00	173.36	20.00	23.32	20.00
PRSL0859PI	11	24.00	264.00	312.00	204.00	24.00	30.00	20.00
PRSL0863PI	12	14.00	168.00	196.00	133.00	14.00	17.50	20.00
PRSL0897PI	12	16.00	192.00	224.00	154.67	16.00	18.67	20.00
PRSL0972PI	12	18.00	216.00	252.00	173.88	18.00	21.06	20.00
PRSL0845PI	12	20.00	240.00	280.00	193.34	20.00	23.32	20.00
PRSL0878PI	12	24.00	288.00	336.00	232.00	24.00	28.00	20.00
PRSL0860PI	13	6.00	78.00	90.00	63.00	6.00	7.50	20.00
PRSL0853PI	13	12.00	156.00	178.59	126.00	11.29	15.00	20.00
PRSL0898PI	13	16.00	208.00	240.00	170.67	16.00	18.66	20.00
PRSL0862PI	14	10.00	140.00	169.00	125.00	15.00	7.50	20.00
PRSL0896PI	14	16.00	224.00	256.00	186.67	16.00	18.67	20.00
PRSL0999PI	14	18.00	252.00	288.00	210.00	18.00	21.00	20.00
PRSL0848PI	14	20.00	280.00	320.00	233.33	20.00	23.33	20.00
PRSL0858PI	15	18.00	270.00	306.00	228.00	18.00	21.00	20.00
PRSL0847PI	16	20.00	320.00	360.00	273.33	20.00	23.33	20.00
PRSL0973PI	17	10.00	170.00	190.00	145.00	10.00	12.50	22.89
PRSL0974PI	17	14.00	238.00	266.00	203.00	14.00	17.50	22.89
PRSL0851PI	20	6.00	120.00	132.00	105.00	6.00	7.50	22.89
PRSL0844PI	25	1.00	25.00	27.00	22.50	1.00	1.25	22.89

Measuring unit: mm.

OSCAR - REQUEST FORM FOR NON STANDARD LIMIT SWITCH

Instructions

(See next pages for list of components and legends)

1. **Version**: tick the required version.
2. **Lima:** tick the box if you require Lima system.
3. **SIL 1 certified:** tick the box if you require SIL 1 certified units.
4. **Revolution ratio**: write the required revolution ratio for each output.
5. **Standard cam sets**: write the code of the cam set required for each output.
6. **Customized cam sets**: for non standard cam sets, fill in the scheme choosing the cams and the switches required. It is possible to assemble sets with 2, 3, 4, 5 or 6 cams/switches. Customized cams are available on request.
7. **Potentiometers, encoders, Yankee**: write the code of the potentiometer, encoder or Yankee required.
   ATTENTION: potentiometer PA020009 can be mounted only alone, i.e. with NO sets of cams.
   Please refer to the table on the next pages for all other possible configurations.
8. **Coupling, flange, pinion gear:** tick the box when coupling, flange or pinion gear are required.
   When a standard pinion gear is required, write the code number listed in the pinion gear tables in the catalogue.
   When a special pinion gear is required, write the number of teeth, the module and the primitive diameter.
9. **Shaft**: tick the shaft type required. Limit switches with Lima are available only with shafts made of high resistance stainless steel AISI 303
   Customized shafts are available on request.
10. **Cable clamps**: tick type and position of the cable clamps (8 max).

Version 1

☐ Version CE EAC

☐ Version cULus CE EAC

☐ Version with anti-moisture plug CE EAC

ATTENTION: Limit switches with Lima are only CE marked.
ATTENTION: Limit switches with shafts made of stainless steel AISI 430F are not cULus certified.

☐ Lima 2

☐ SIL1 certified 3

ATTENTION: Oscar XL with cover rise are not SIL1 certified.

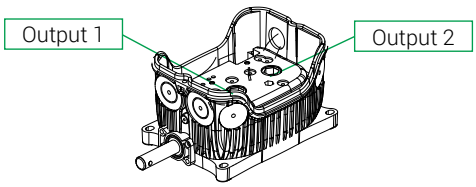

Revolution ratio 4

Output 1			Output 2
☐ 1:1	☐ 1:25	☐ 1:200	☐ 1:1
☐ 1:5	☐ 1:50	☐ 1:250	☐ Revolution ratio equal to output 1
☐ 1:10	☐ 1:70	☐ 1:300	
☐ 1:15	☐ 1:100	☐ 1:450	
☐ 1:20	☐ 1:150	☐ 1: ____	

Standard cam sets 5

Cam set code

_____ Output 1

_____ Output 2

Customized cam sets 6

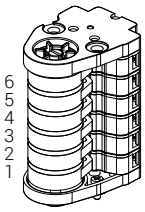

Output 1

Cam code	Switch code
6 _____	_____
5 _____	_____
4 _____	_____
3 _____	_____
2 _____	_____
1 _____	_____

Output 2

Cam code	Switch code
6 _____	_____
5 _____	_____
4 _____	_____
3 _____	_____
2 _____	_____
1 _____	_____

Potentiometers, encoders, Yankee 7

	Output 1	Output 2
Code	_____	_____

☐ **Male coupling** ☐ **Coupling** 8

☐ **Female coupling** ☐ **Flange**

☐ **Pinion gear**

Pinion gear code _____

Customized pinion gear

No. of teeth _____

Module _____

Primitive diameter _____

Standard shaft 9

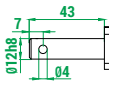

☐ Stainless steel AISI 430F shaft

☐ High resistance stainless steel AISI 303 shaft

Flexible shaft

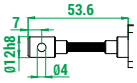

☐ Stainless steel AISI 430F shaft

☐ High resistance stainless steel AISI 303 shaft

Cable clamps 10

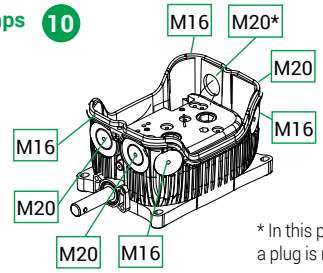

* In this position an M20 cable clamp or a plug is mandatory.

5 Legend - Standard cam sets

No. & type of switches	No. & type of cams	Code
2 x PRSL0110XX	2 cams A	FCL20001
	Cams A+C	FCL20003
	2 cams C	FCL20005
4 x PRSL0110XX	Cams D+D+B+F	FCL40001
	4 cams A	FCL40003
	Cams A+A+C+C	FCL40005
	4 cams C	FCL40007
	Cams C+C+C+E	FCL40009
	Cams A+A+E+E	FCL40011
5 x PRSL0110XX	5 camme A	FCL50006
	5 camme C	FCL50001
6 x PRSL0110XX	6 camme A	FCL60003
	6 camme C	FCL60001
2 x PRSL0111XX	2 cams A	FCL20002
	Cams A+C	FCL20004
	2 cams C	FCL20006
4 x PRSL0111XX	Cams D+D+B+F	FCL40002
	4 cams A	FCL40004
	Cams A+A+C+C	FCL40006
	4 cams C	FCL40008
	Cams C+C+C+E	FCL40010
	Cams A+A+E+E	FCL40012
5 x PRSL0111XX	5 camme A	FCL50005
	5 camme C	FCL50010
6x PRSL0111XX	6 camme A	FCL60006
	6 camme C	FCL60010

7 Legend - Potentiometers, encoders and Yankee

Description	Code
Potentiometer 10 kΩ with support	PA020001
Potentiometer 10 kΩ mechanical stop with support	PA020002
Potentiometer 10 kΩ ±10% 4 pins with support	PA020003
Potentiometer 10 kΩ ±10% 3 pins with support	PA020004
Potentiometer 5 kΩ ±10% with support	PA020005
Potentiometer 4.7 kΩ with support	PA020006
Potentiometer 10 kΩ with support	PA020007
Potentiometer 2.2 kΩ with support	PA020008
Potentiometer 2KΩ with support	PA020009
Encoder 36 pulses./rev. with support	PA030001
Encoder 150 pulses./rev. with support	PA030002
Yankee - current output	PA01AA01
Yankee - voltage output	PA01AB01
Yankee - PWM output	PA01AC01

6 Legend - Switches

PRSL0110XX	PRSL0111XX
1NO+1NC	1NC

6 Legend - Standard cams

Cam			Code for PRSL0110XX switches	Switching angle with PRSL0110XX	Code for PRSL0111XX switches	Switching angle with PRSL0111XX
A		1 point	PRSL7194PI	21.5° ±0.5°	PRSL7194PI	23.0° ±0.5°
B		10 points	PRSL7193PI	21.5° ±0.5°	PRSL7193PI	23.0° ±0.5°
C		60° sector	PRSL7195PI	82.0° ±0.5°	PRSL7195PI	86.0° ±0.5°
D		72° sector	PRSL7196PI	94.0° ±0.5°	PRSL7196PI	97.5° ±0.5°
E		180° sector	PRSL7191PI	204.5° ±0.5°	PRSL7191PI	203.0° ±0.5°
F		305° sector	PRSL7192PI	328.5° ±0.5°	PRSL7192PI	327.0° ±0.5°

7 Configuration table

The following table shows possible configurations of Oscar and Oscar XL.
When it is not possible to mount a set of cams together with a potentiometer/encoder, the table shows «Not available».
When the standard cover PA090008 is not high enough to hold the elements mounted inside the limit switch, it is possible to use the cover rise PRSL0703PI (the table shows «Oscar XL»).
In all other cases it is possible to mount the sets of cams and potentiometer/encoder with the standard cover PA090008 (the table shows «Oscar»).

	Set of cams with 2 switches	Set of cams with 3 switches	Set of cams with 4 switches	Set of cams with 5 switches	Set of cams with 6 switches
Set of cams only	Oscar	Oscar	Oscar	Oscar	Oscar XL
Set of cams + Yankee1	Oscar	Oscar	Oscar	Oscar XL	Oscar XL
Set of cams + PA020001	Oscar	Oscar XL	Oscar XL	Not available	Not available
Set of cams + PA020002	Oscar	Oscar XL	Oscar XL	Not available	Not available
Set of cams + PA020003	Oscar	Oscar	Oscar XL	Oscar XL	Not available
Set of cams + PA020004	Oscar	Oscar	Oscar XL	Oscar XL	Not available
Set of cams + PA020005	Oscar	Oscar	Oscar XL	Oscar XL	Not available
Set of cams + PA020006	Oscar	Oscar XL	Oscar XL	Not available	Not available
Set of cams + PA020007	Oscar	Oscar XL	Oscar XL	Not available	Not available
Set of cams + PA020008	Oscar	Oscar XL	Oscar XL	Not available	Not available
Set of cams + PA030001	Oscar	Oscar	Oscar XL	Oscar XL	Not available
Set of cams + PA030002	Oscar	Oscar	Oscar XL	Oscar XL	Not available

REMARKS